Fire Alarm Stations

270 Series

MEA

Overview

ADT 270 Series Non-Coded Fire Alarm Stations are sturdy, attractive, and designed for economical installation.

The station is available in the following operational and functional designs:

— **The 270 Series** provides a single action, break glass initiating station. It is available with normally open (N.O.), normally closed (N.C.) or combination N.O./N.C. contacts. The basic 270 Series have screw terminals for field connection. The 270A Series Manual Stations have 6 inch (150mm) wire leads.

— **The 270P Series** is a break glass, normally open pre-signal station. The pull of the lever sounds an alarm on all pre-signal indicating devices. Inserting a key and turning it will initiate a general evacuation alarm. Screw terminals are provided for field connection.

All non-coded statins are designed for either flush or surface mounting. For flush mounting a 4 inch standard North American square box with single gang plaster cover should be used. For surface mounting the 270 Series or 270P Series, use P-027193 Cast Box, P-039250 Steel Box, or Cat. No. 1291 Housing for weatherproof enclosure.

Standard Features

- Pull lever
- Simple positive operation
- Break glass
- Attractive, streamline design
- Less than 5 lb pull force complies with ADA
- Solid, die-cast metal construction

Mounting

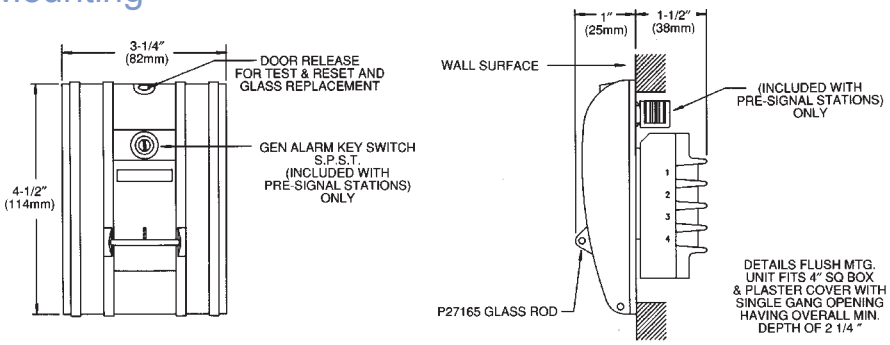

FLUSH INSTALALTION
USING P-024900 STEEL BOX

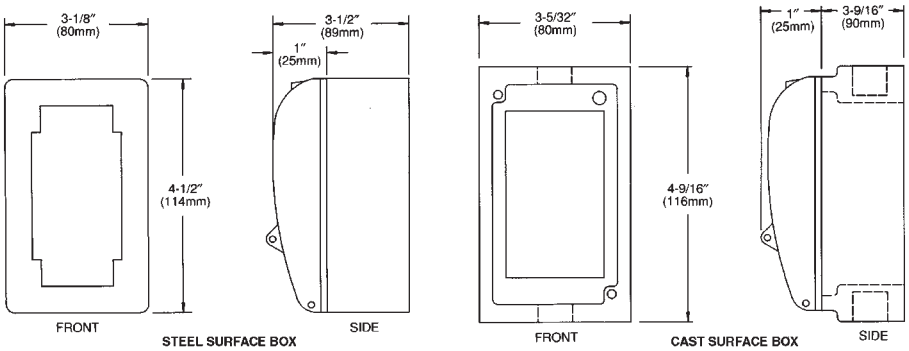

STEEL SURFACE BOX
P-039250

CAST SURFACE BOX
P-027193

Ordering Information

All models are fire alarm red with Aluminum Strips. They are marked "Pull in Case of Fire" on the pull handle.

Cat. No.	Marking (top of device)	Switch Contacts			Field Connections		Pre-Signal
		Single Pole	Double Pole	Open Circuit	Screw Terminals	Wire Leads	Pre-Signal
270-DPO	Fire Alarm		✓	✓	✓		
270-DPO-L	Local Alarm		✓	✓	✓		
270-SPO	Fire Alarm	✓		✓	✓		
270A-DPO	Fire Alarm		✓	✓		✓	
270A-SPO	Fire Alarm	✓		✓		✓	
270P-DPO	Fire Alarm		✓	✓	✓		✓
270P-SPO	Fire Alarm	✓		✓	✓		✓

WARNING: These devices will not operate without electrical power. As fires frequently cause power interruptions, we suggest you discuss further safeguards with your local fire protection specialist.

© 2007 ADT Security Services, Inc.
One Town Center Road
Boca Raton, FL 33489
www.adt.com